Capsule pressure gauge, copper alloy
Plastic case
Model 611.16

WIKA data sheet PM 06.08

for further approvals
see page 3

Applications

For gaseous, dry and non-aggressive media

Special features

- Nominal size 68 mm
- Plastic case with front flange
- Low scale ranges from 0 ... 25 mbar
- Zero point setting in front

Capsule pressure gauge model 611.16

Description

The model 611.16 capsule pressure gauges are based upon the proven capsule measuring system. On pressurisation, the expansion of the capsule element, proportional to the incident pressure, is transmitted to the movement and indicated.

The case is made from black plastic, with a snap-fitted window. Wetted parts such as process connection and pressure element are designed with copper alloys.

The modular design enables a multitude of combinations of process connections and scale ranges. Due to this high variance, the instrument is suitable for use in a wide range of applications within industry.

For mounting in control panels, the capsule pressure gauge can, depending on the process connection, be fitted with a mounting bracket.

Part of your business

Standard version

Design
Following 837-3

Nominal size in mm
68

Accuracy class
1.6

Scale ranges
0 ... 25 mbar to 0 ... 600 mbar
or all other equivalent vacuum or combined pressure and vacuum ranges

Pressure limitation
Steady: Full scale value
Fluctuating: 0.9 x full scale value

Permissible temperature
Ambient: -20 ... +60 °C (-4 ... +140 °F)
Medium: ≤ 60 °C (≤ 140 °F)

Temperature effect
When the temperature at the measuring system deviates from the reference temperature +20 °C (+68 °F): max. ±0.6 %/10 K of full scale value

Ingress protection per IEC/EN 60529
IP32

Process connection
Copper alloy
Lower mount (radial) or centre back mount
¼" NPT (male), SW 14

Pressure element
Copper alloy

Movement
Copper alloy

Zero point setting
In front

Dial
Aluminium, white, black lettering

Pointer
Aluminium, black

Case
Plastic, black, with front flange

Window
Plastic, transparent, snap-fitted window

Options

- Other process connections
- Overload or vacuum safety with
  scale ranges < 40 mbar: 3 x full scale value
  scale ranges ≥ 40 mbar: 10 x full scale value
- Mounting bracket, galvanised steel
- Drag pointer for scale ranges from 0 ... 60 mbar

Dimensions

Lower mount (radial)

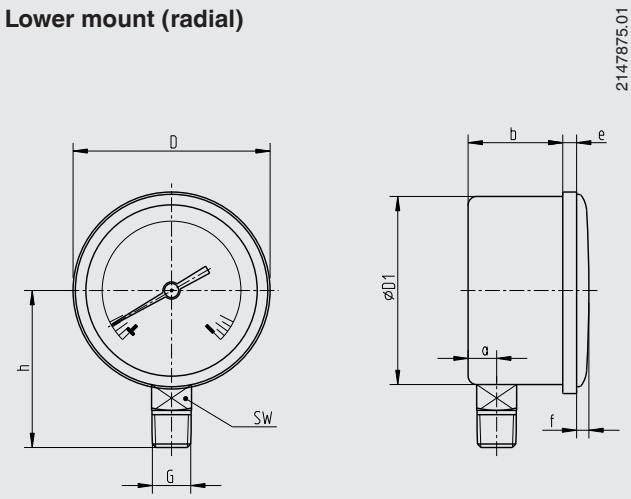

Centre back mount

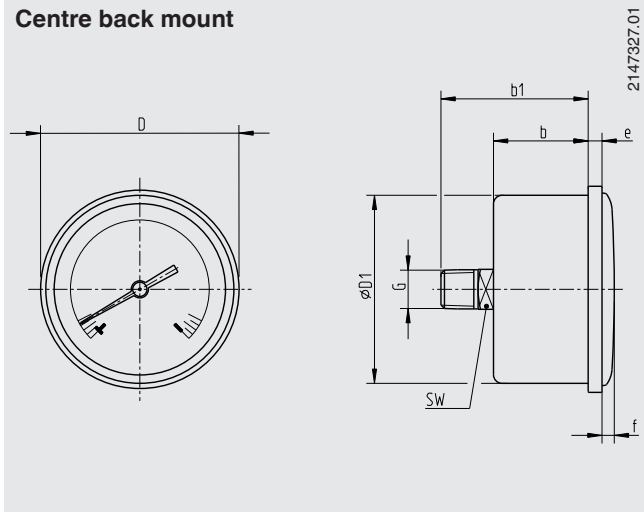

NS	Dimensions in mm										Weight in kg
	a	b	b_1	D	D_1	G	h ± 1	e	f	SW 2)	
68	10	33	51.5	69 1)	66	¼ NPT	55	4.9	4.3	14	0.14

NS	Dimensions in inch										Weight in lbs
	a	b	b_1	D	D_1	G	h ± 1	e	f	SW 2)	
2.677	0.393	1.299	2.028	2.717 1)	2.598	¼ NPT	2.165	1.929	1.693	0.551	0.31

1) for built-in instrument with mounting bracket, D = 72 mm (2.83 in)
2) SW = spanner width

Process connection per EN 837-3 / 7.3

Approvals

Logo	Description	Country
	GOST Metrology, measurement technology	Russia
	BelGIM Metrology, measurement technology	Belarus
	UkrSEPRO Metrology, measurement technology	Ukraine

Certificates (option)

- 2.2 test report

Approvals and certificates, see website

Ordering information

Model / Scale range / Process connection / Options

© 11/2000 WIKA Alexander Wiegand SE & Co. KG, all rights reserved.
The specifications given in this document represent the state of engineering at the time of publishing.
We reserve the right to make modifications to the specifications and materials.

WIKA Alexander Wiegand SE & Co. KG
Alexander-Wiegand-Straße 30
63911 Klingenberg/Germany
Tel. +49 9372 132-0
Fax +49 9372 132-406
info@wika.de
www.wika.com